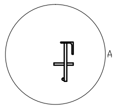

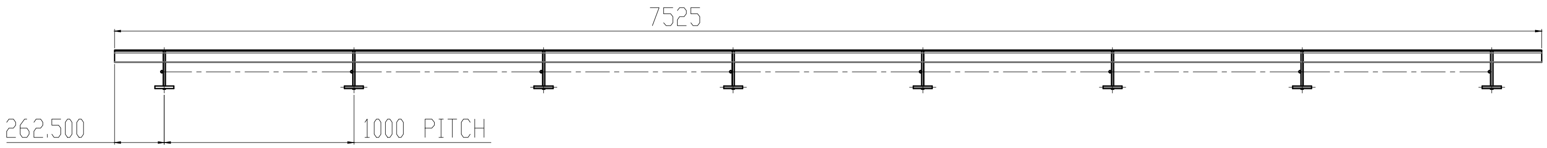
7525
262.500
1000 PITCH

RAIL FOR TBC TROLLEY
MOC:-MS
QTY:-3NOS.

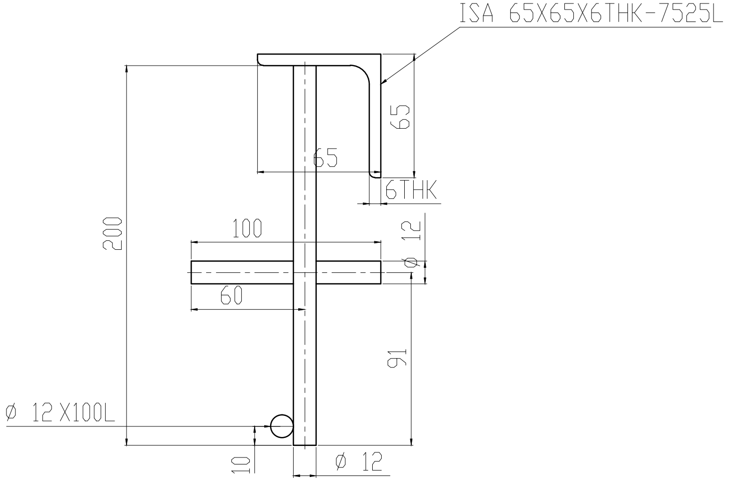
ISA 65X65X6THK-7525L
65
65
6THK
200
100
Ø 12
60
91
Ø 12X100L
10
Ø 12

DETAIL A
SCALE 1 : 1

HOLD FAST DETAILS

UNLESS OTHERWISE SPECIFIED:
DIMENSIONS ARE IN MILLIMETERS
SURFACE FINISH:
TOLERANCES:
LINEAR:
ANGULAR:

FINISH:

DEBURR AND
BREAK SHARP
EDGES

DO NOT SCALE DRAWING

REVISION

	NAME	SIGNATURE	DATE
DRAWN			
CHK'D			
APPV'D			
MFG			
Q.A			

TITLE:

MATERIAL:

WEIGHT:

DWG NO.
RAIL GUIDE ANGLE

A0

SCALE:1:20

SHEET 1 OF 1